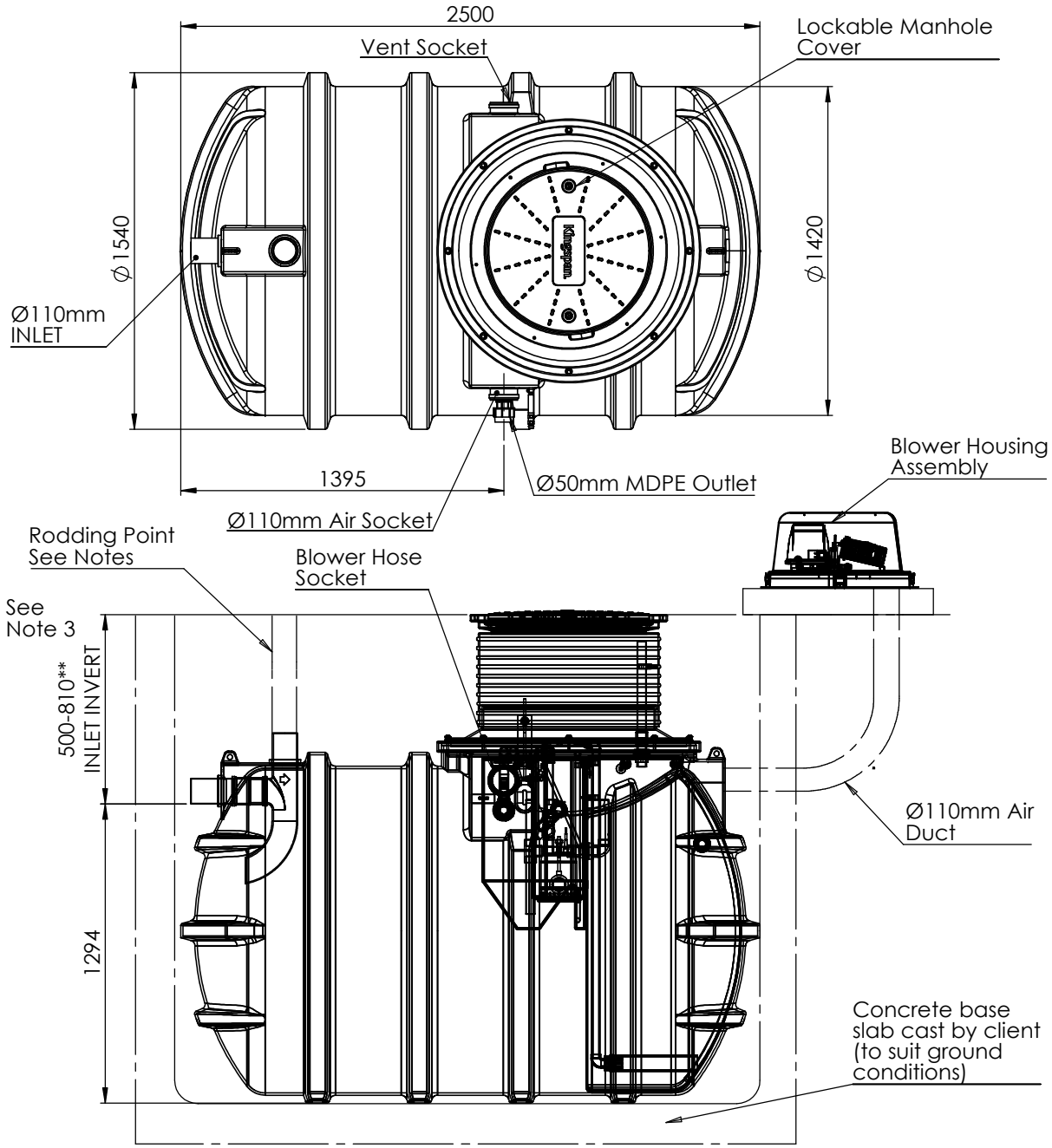

Notes :

1. INLET is Ø110 mm. Suitable reducers should be used to step down from bigger pipework. Supplied by others.
2. OUTLET is Ø50mm Outside Diameter MDPE Compression Fitting.
3. Standard Tank supplied has 810mm Inlet Invert; this can be reduced to min 500mm Inlet Invert by trimming the neck.
4. Units invert is adjustable by trimming external riser to required height. Selection of correct invert is key and must be suitable for drainage and ground levels on site.
5. Ext neck kit available for deeper inverts up to a maximum invert of 1500 mm.
6. It is important to read and understand installation operation and maintanance guidelines before attempting to install this unit.
7. Vent pipe connections are supplied but vent runs and stacks are supplied by others.
8. Ø110mm Rodding point connection provided - to be extended to ground level by others and capped.
9. The unit will normally need de sludged annually. However this is dependant on use.
10. Tank Weight (Empty) - 285 Kgs

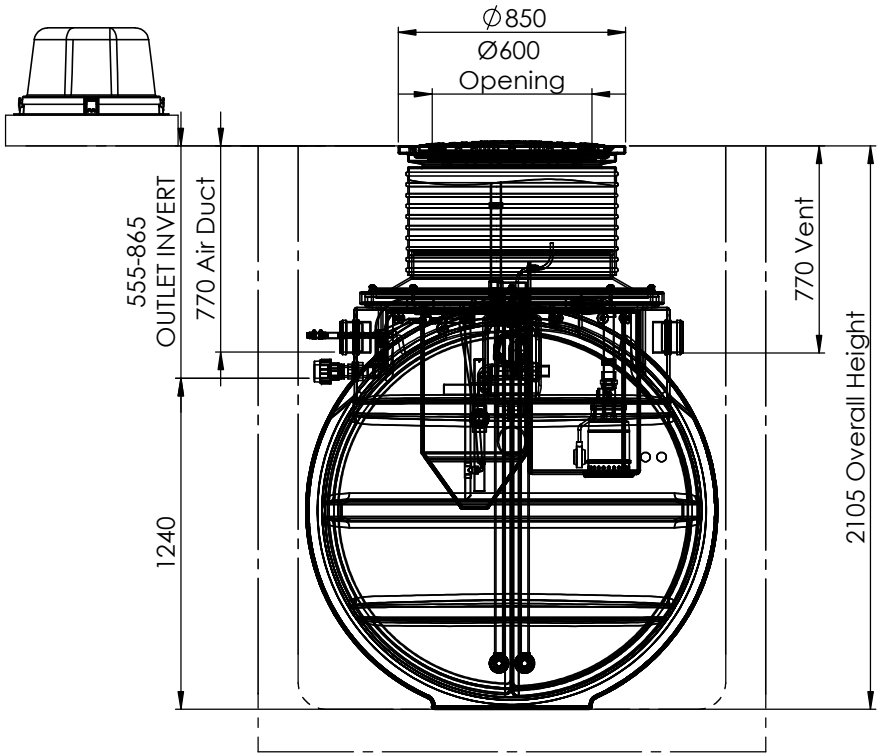

Please check with Kingspan Environmental that this drawing is the latest issue

Issue	Date	Drawn by	Approved by	Description
01	21/12/15	JMcM		Initial Issue

Material :
Finish :
Weight : Kgs
Tolerance :
Thickness :
Surface Area :

Drawing : DS1276P

BioFicient 1 (6PE) Sales Drawing - IPS

All dimensions in mm

Scale: Not to scale

Kingspan Environmental reserve the right to alter the details of this drawing without prior notice. This drawing is copyright and may not be reproduced or used without the written permission of Kingspan Environmental.

Kingspan Environmental

U:\engineering\Engineering Projects\938A - BioFicient 6 WWTP (MDPE)\Drawings\DS1276P